LT035B-33DT

3.5", 320(RGB) x 240 TFT + touch panel, 8-bit MCU interface, 3.3V

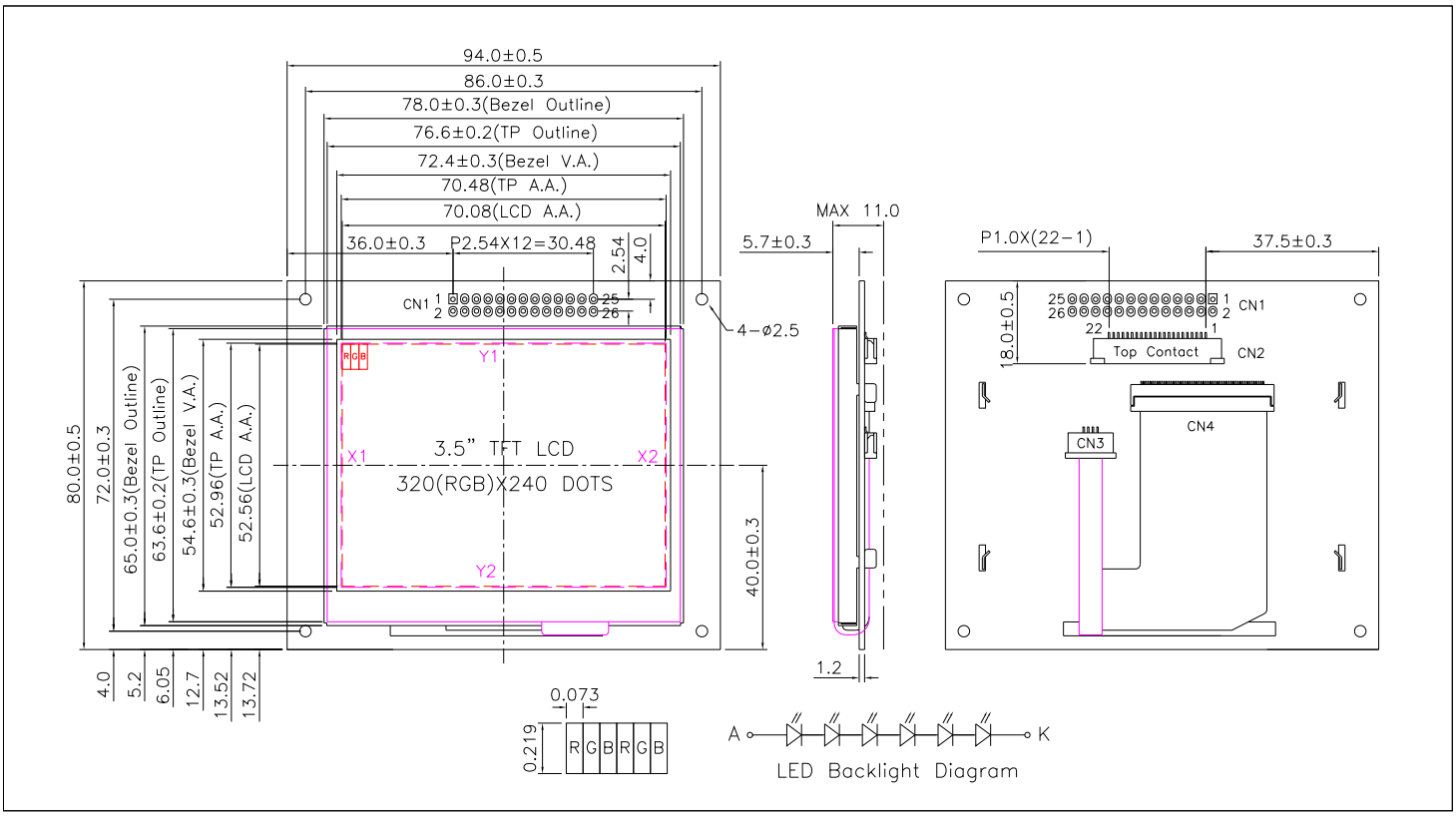

ABSOLUTE MAXIMUM RATINGS

Item	Symbol	Min.	Max.	Unit
Supply Voltage	V_{DD}- V_{SS}	-0.3	4.0	V
Input Voltage	V_I	-0.3	V_{DD}+ 0.3	V
Operating Temp.	T_{opr}	-20	70	°C
Storage Temp.	T_{stg}	-30	80	°C

MECHANICAL DATA

Item	Nominal Dimensions	Unit
Module Size (W x H x T)	94.0 x 80.0 x 11.0	mm
Viewing Area (W x H)	72.4 x 54.6	mm
Active Area (W x H)	70.08 x 52.56	mm
Dot Pitch (W x H)	0.073 x 0.219	mm
Weight	Approx. 72	g

ELECTRICAL CHARACTERISTICS (V_{DD}=3.3V±0.3V)

Item	Symbol	Test Condition	Min.	Typ.	Max.	Unit
Input High Voltage	V_{IH}	--	0.9V_{DD}	--	V_{DD}	V
Input Low Voltage	V_{IL}	--	0	--	0.1V_{DD}	V
Supply Current (LED is turned on)	I_{DD}	V_{DD} = 3.3V	--	155	175	mA
Supply Current (LED is turned off)	I_{DD}	V_{DD} = 3.3V	--	50	60	mA

PIN CONNECTIONS (CN1/CN2)

Pin	Symbol	Level	Function
1	V_{SS}	0V	GND
2	V_{DD}	3.3V	Power supply for logic and backlight
3	BL	H/L	LED backlight control signal H: LED on L: LED off
4	D/C	H/L	Data or command selection H: Display data L: Command
5	/WR	L	Write signal. Active "L".
6	/RD	L	Read signal. Active "L".
7	DB0	H/L	Data bus
8	DB1	H/L	
9	DB2	H/L	
10	DB3	H/L	
11	DB4	H/L	
12	DB5	H/L	
13	DB6	H/L	
14	DB7	H/L	
15	/CS	H→L	Chip enable signal. Active at falling edge.
16	/RST	L	Reset signal. Active "L".
17	X1	--	Touch panel left side terminal
18	Y2	--	Touch panel bottom side terminal
19	X2	--	Touch panel right side terminal
20	Y1	--	Touch panel top side terminal
21-22	NC	--	No connection
23-26	NC	--	No connection
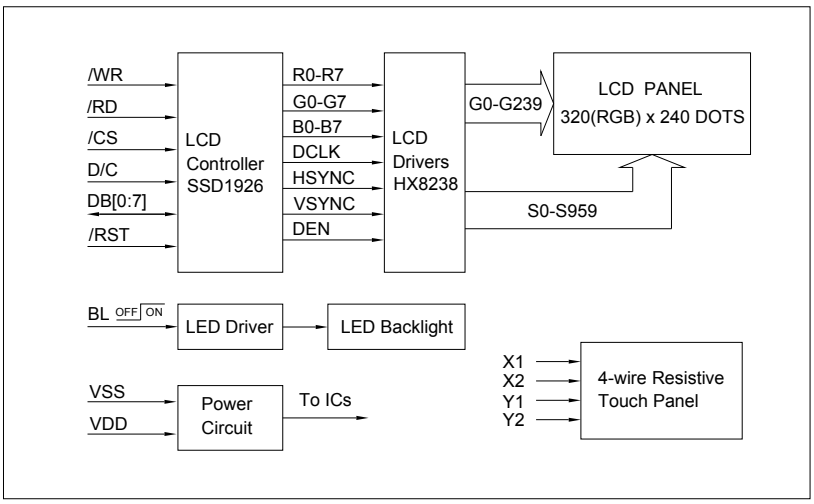
BLOCK DIAGRAM